Angle of Arrival target tracking and velocity vector determination using SVD method on passive coherent multistatic radar.

NIKOS J. FARSARIS Dipl. Eng.
Telecommunications Dept.
Electrical and Computer Engineering Faculty.
Aristotle Univ. of Thessaloniki.
54006 Thessaloniki GREECE.

Abstract: – This paper is about the solution of overdetermined and exactly determined linear system using SVD (Singular Value Decomposition) method for multistatic target tracking. The proposed radar system is a passive multistatic radar or Transmitter Independent Receiver Network. This system consists of a number of radar receivers networked together for coherent operation. In the introduction the system is briefly described. Then the linear equations of target are extracted and an SVD solution is proposed. Finally the solution is evaluated through a real-time simulation process, using inexpensive and readily available media. It is concluded that given enough computational power the SVD method is a plausible method for target tracking.

Keywords: – Multistatic radar, Angle of Arrival, SVD, tracking, Doppler.

1. Introduction

A Transmitter Independent Receiver Network (TIRN) is coherent, passive multistatic radar that consists of a number of independent bistatic receivers interconnected in order to exchange target data. [1].

A TIRN is essentially a "hitch-hiker"; it uses the signal of other sources in the area

Multimode target detection and tracking operation is proposed in [2], [3] which consist of:

- Time Difference of Arrival (Pulsed signal – antenna independent method)
- Angle of Arrival (Monopulse antenna – signal independent method)

Also mentioned in [1], [3]is that if an appropriate signal (e.g. Continuous Wave – CW) is transmitted to the target and reflected back a four receiver TIRN may determine the velocity vector of a target with accuracy, by measuring the multiple Doppler shifts even if a systematic error exists.

2. Linear systems on a TIRN

2.1 Angle of Arrival.

A monopulse receiver [4] can produce two perpendicular surfaces each one containing the target and the receiver points. Two monopulse receivers at different locations can produce can produce in most cases four surfaces intersecting on the target. Special cases are:

- The target is located at equal or opposite azimuths or equal elevations from the receivers: Three surfaces are given.
- The target is on the straight line connecting the receivers: Only two surfaces are given.

From these special cases only the second can actually create a detection problem that will occur for a very short time for a moving target. If three or more receivers are used this problem is eliminated. In this paper a four-receiver model is used on a random constellation so none of the mentioned cases can occur. A for receiver model is required for velocity vector discrimination as it will be shown later.

Let $r_i(x_i, y_i, z_i)$ and $r_T(x, y, z)$ be the locations of one of the receivers ($i \in \{1,2,3,4\}$) and the target respectively. Then the equations connecting the Cartesian coordinates with the spherical coordinates measured on each receiver by its monopulse antenna are given below:

$$\begin{aligned} x - x_i &= R_i \cos\phi_i \sin\vartheta_i \\ y - y_i &= R_i \sin\phi_i \sin\vartheta_i \\ z - z_i &= R_i \cos\vartheta_i \end{aligned} \tag{1}$$

Note that R_i is the range from the receiver to the target, and it can be eliminated. After some algebraic calculations system (1) is equivalent to:

$$\begin{bmatrix} \cos\vartheta_i & 0 & -\cos\phi_i \sin\vartheta_i \\ 0 & \cos\vartheta_i & -\sin\phi_i \sin\vartheta_i \end{bmatrix} \begin{bmatrix} x \\ y \\ z \end{bmatrix} = \begin{bmatrix} \cos\vartheta_i & 0 & -\cos\phi_i \sin\vartheta_i \\ 0 & \cos\vartheta_i & -\sin\phi_i \sin\vartheta_i \end{bmatrix} \begin{bmatrix} x_i \\ y_i \\ z_i \end{bmatrix} \tag{2}$$

This is an equation of a straight line connecting the receiver and the target, and it is actually the

equation of the bore sight of the monopulse antenna expressed in Cartesian coordinates.

Similar expressions can be extracted for all the four receivers and after the combination of them, the system becomes:

$$\mathbf{Ax} = \mathbf{b} \tag{3}$$

With:

$$\mathbf{x} = \mathbf{r_T} = \begin{bmatrix} x \\ y \\ z \end{bmatrix} \tag{4a}$$

$$\mathbf{A} = \begin{bmatrix} \cos\vartheta_1 & 0 & -\cos\phi_1 \sin\vartheta_1 \\ 0 & \cos\vartheta_1 & -\sin\phi_1 \sin\vartheta_1 \\ \cos\vartheta_2 & 0 & -\cos\phi_2 \sin\vartheta_2 \\ 0 & \cos\vartheta_2 & -\sin\phi_2 \sin\vartheta_2 \\ \cos\vartheta_3 & 0 & -\cos\phi_3 \sin\vartheta_3 \\ 0 & \cos\vartheta_3 & -\sin\phi_3 \sin\vartheta_3 \\ \cos\vartheta_4 & 0 & -\cos\phi_4 \sin\vartheta_4 \\ 0 & \cos\vartheta_4 & -\sin\phi_4 \sin\vartheta_4 \end{bmatrix} \tag{4b}$$

$$\mathbf{b} = \begin{bmatrix} x_1 \cos\vartheta_1 - z_1 \cos\phi_1 \sin\vartheta_1 \\ y_1 \cos\vartheta_1 - z_1 \sin\phi_1 \sin\vartheta_1 \\ x_2 \cos\vartheta_2 - z_2 \cos\phi_2 \sin\vartheta_2 \\ y_2 \cos\vartheta_2 - z_2 \sin\phi_2 \sin\vartheta_2 \\ x_3 \cos\vartheta_3 - z_3 \cos\phi_3 \sin\vartheta_3 \\ y_3 \cos\vartheta_3 - z_3 \sin\phi_3 \sin\vartheta_3 \\ x_4 \cos\vartheta_4 - z_4 \cos\phi_4 \sin\vartheta_4 \\ y_4 \cos\vartheta_4 - z_4 \sin\phi_4 \sin\vartheta_4 \end{bmatrix} \tag{4c}$$

This is an overdetermined 8×3 system. It is known though that at least a solution exists in this case, at the target location point. Bearing in mind that an exact algebraic solution may not be possible due to angular measurement random errors a minimum RMSE solution will be given by the SVD method.

2.2 Velocity vector synthesis

In a bistatic system the Doppler frequency shift is given by the equation:

$$f_{Di} = -f_T \frac{\dot{r}_T + \dot{r}_i}{c} \tag{5}$$

In this equation $\dot{r}_T$ and $\dot{r}_i$ is the radial velocity of the target at the target-transmitter and target-receiver directions, while f_T, f_{Di}, c is the transmitted signal (carrier) frequency, the Doppler shift frequency and the light velocity in the atmosphere. This is equivalent to:

$$v_T + v_i = \dot{r}_T + \dot{r}_i = -c\frac{f_{Di}}{f_T} \tag{6}$$

If the TIRN is synchronized with a stable local oscillator, an error in Doppler shift measurement can be tolerated since it will be the same error f_{de} at all the receiver measurements:

$$v_e + v_T + v_i = \dot{r}_T + \dot{r}_i = -c\frac{f_{Di}}{f_T} - c\frac{f_{de}}{f_T} \tag{7}$$

In this case a systematic error in velocity is:

$$v_e = -c\frac{f_{de}}{f_T} \tag{8}$$

The measured Doppler shift on any receiver is then f_{dmi} and the following equations apply:

$$v_{te} = v_T + v_e \tag{9a}$$

$$f_{dmi} = f_{de} + f_{Di} \tag{9b}$$

$$v_{te} + v_i = -c\frac{f_{dmi}}{f_T} = \delta_i \tag{9c}$$

The above analysis shows that it is possible to measure the velocity projection on a target-receiver direction approximated by an unknown constant v_{te}, identical for all the receivers of a TIRN.

Since the velocity vector can be analyzed in three dimensions then there are four unknown quantities that must be identified. That is why a TIRN must be created by at least four receivers in order to exploit its full capabilities. For formulating and solving the velocity vector synthesis problem it is better to analyze the velocity using a target-centered Cartesian coordinate system [1], [6], since the velocity is a vector bound on target. If $\vec{v}_i$ is the vector velocity projection on a target-receiver direction and $\vec{v}(u, w, s)$ the actual velocity of the target:

$$\vec{v} \cdot \vec{v}_i = \vec{v}_i^2 = v_i^2 = \dot{r}_i^2 \tag{10}$$

Combining (9c) and (10) and after some algebraic calculations [1], a linear system is generated:

$$\begin{bmatrix} \cos\phi_1 \sin\vartheta_1 & \sin\phi_1 \sin\vartheta_1 & \cos\vartheta_1 & 1 \\ \cos\phi_2 \sin\vartheta_2 & \sin\phi_2 \sin\vartheta_2 & \cos\vartheta_2 & 1 \\ \cos\phi_3 \sin\vartheta_3 & \sin\phi_3 \sin\vartheta_3 & \cos\vartheta_3 & 1 \\ \cos\phi_4 \sin\vartheta_4 & \sin\phi_4 \sin\vartheta_4 & \cos\vartheta_4 & 1 \end{bmatrix} \cdot \begin{bmatrix} u \\ w \\ s \\ v_{te} \end{bmatrix} = \begin{bmatrix} \delta_1 \\ \delta_2 \\ \delta_3 \\ \delta_4 \end{bmatrix} \tag{11}$$

In this equation the angular coordinates are translated from the target-centered coordinate system to the correspondent's receiver-centered parallel to that, since the corresponding coordinates are π radians (180 degrees) supplementary.
Expressing this in matrix-vector form we get:

$$\mathbf{G} \cdot \tilde{\mathbf{v}} = \boldsymbol{\delta} \tag{12}$$

The above is a linear exactly determined system the solution method is similar to the detection problem.

Considering v_{te} in (11) or (12) as a total systematic error and applying a similar ANN solution the ANN used has a similar architecture the only differences being that matrix $\mathbf{G}$ is a 4×4 matrix, and the solution vector $\tilde{\mathbf{v}}$ differs to the actual velocity vector $\mathbf{v}$ by its fourth term only, which is the systematic error mentioned. Thus this problem is exactly determined. The SVD solver can be used for soling (12) in the same way as (3).

3. Solution using SVD.

The Singular Value decomposition is a well known method for the pseudo-inverse (or inverse) matrix determination in overdetermined and exactly determined linear systems [5].

Matrices **A** and **G** in (3) and (12) are real (with no imaginary parts) so their SVD may be expressed as:

$$\mathbf{A} = \mathbf{U} \cdot \mathbf{S} \cdot \mathbf{V}^{\mathbf{T}} \tag{13}$$

And:

$$\mathbf{G} = \mathbf{W} \cdot \mathbf{C} \cdot \mathbf{P}^{\mathbf{T}} \tag{14}$$

With:

$$\mathbf{U}^{\mathbf{T}} \cdot \mathbf{U} = \mathbf{U} \cdot \mathbf{U}^{\mathbf{T}} = \mathbf{I}_{(8\times8)} \tag{15}$$

$$\mathbf{V}^{\mathbf{T}} \cdot \mathbf{V} = \mathbf{V} \cdot \mathbf{V}^{\mathbf{T}} = \mathbf{I}_{(3\times3)} \tag{16}$$

$$\mathbf{W}^{\mathbf{T}} \cdot \mathbf{W} = \mathbf{W} \cdot \mathbf{W}^{\mathbf{T}} = \mathbf{I}_{(4\times4)} \tag{17}$$

$$\mathbf{P}^{\mathbf{T}} \cdot \mathbf{P} = \mathbf{P} \cdot \mathbf{P}^{\mathbf{T}} = \mathbf{I}_{(4\times4)} \tag{18}$$

$\mathbf{S}_{(3X8)}$ and $\mathbf{C}_{(4X4)}$ are diagonal matrices with ranks 3 and 4 respectively. In order to achieve these ranks the four receivers should not be in the same planar surface. [2]. Then:

$$\mathbf{S} = \begin{bmatrix} s_{11} & 0 & 0 \\ 0 & s_{22} & 0 \\ 0 & 0 & s_{33} \\ 0 & 0 & 0 \\ 0 & 0 & 0 \\ 0 & 0 & 0 \\ 0 & 0 & 0 \\ 0 & 0 & 0 \end{bmatrix} \tag{19}$$

And:

$$\mathbf{C} = \begin{bmatrix} c_{11} & 0 & 0 & 0 \\ 0 & c_{22} & 0 & 0 \\ 0 & 0 & c_{33} & 0 \\ 0 & 0 & 0 & c_{44} \end{bmatrix} \tag{20}$$

Then the pseudo inverse can easily be calculated as:

$$\mathbf{A}^{+} = \mathbf{V} \cdot \mathbf{S}^{+} \cdot \mathbf{U}^{\mathbf{T}} \tag{21}$$

And:

$$\mathbf{G}^{+} = \mathbf{P} \cdot \mathbf{C}^{+} \cdot \mathbf{W}^{\mathbf{T}} \tag{22}$$

With:

$$\mathbf{S}^{+} = \begin{bmatrix} \frac{1}{s_{11}} & 0 & 0 & 0 & 0 & 0 & 0 & 0 \\ 0 & \frac{1}{s_{22}} & 0 & 0 & 0 & 0 & 0 & 0 \\ 0 & 0 & \frac{1}{s_{33}} & 0 & 0 & 0 & 0 & 0 \end{bmatrix} \tag{23}$$

$$\mathbf{C}^{+} = \begin{bmatrix} \frac{1}{c_{11}} & 0 & 0 & 0 \\ 0 & \frac{1}{c_{22}} & 0 & 0 \\ 0 & 0 & \frac{1}{c_{33}} & 0 \\ 0 & 0 & 0 & \frac{1}{c_{44}} \end{bmatrix} \tag{24}$$

Then (3) and (12) have the minimum RMSE solutions:

$$\mathbf{x} = \mathbf{A}^{+} \cdot \mathbf{b} = \mathbf{V} \cdot \mathbf{S}^{+} \cdot \mathbf{U}^{\mathbf{T}} \cdot \mathbf{b} \tag{25}$$

$$\tilde{\mathbf{v}} = \mathbf{G}^{+} \cdot \boldsymbol{\delta} = \mathbf{P} \cdot \mathbf{C}^{+} \cdot \mathbf{W}^{\mathbf{T}} \cdot \boldsymbol{\delta} \tag{26}$$

4. Simulation models and results.

Simulink ® (Matlab) models are created and results are exacted for evaluation on a 4400 MHz dual core PC clone. The machine used is one of the mini tower PC low budget constructions, running Microsoft Windows 2000 ®.

The AoA model (fig. 1) consists of:

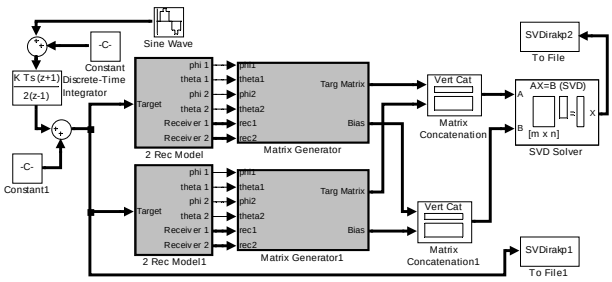

Fig 1: AoA TIRN model

- Two twin receiver models (fig. 2) this is the essential TIRN (AoA –only) extracts angles out of pairs of monopulse antennas. Also extracts the receivers' coordinates. (GPS/Glonass data or topographic maps can be used in the real world situations)

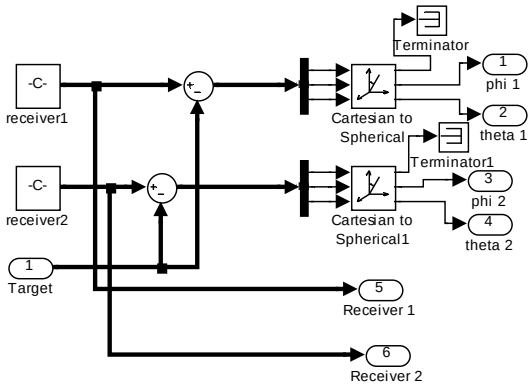

Fig. 2: A two-receiver model simulated

- A matrix generator (either hardwired or software operated) that extracts matrices **A** and **b**. It consists essentially of trigonometric functions and matrix multiplication blocks.
- The SVD solver. Alongside with the generator could be materialized by a dedicated computer with insignificant cost (fig 3). LAPACK routines are readily available [6] and Matlab ® itself uses this package with some limitations. (only 75 iterations are allowed according to [7])

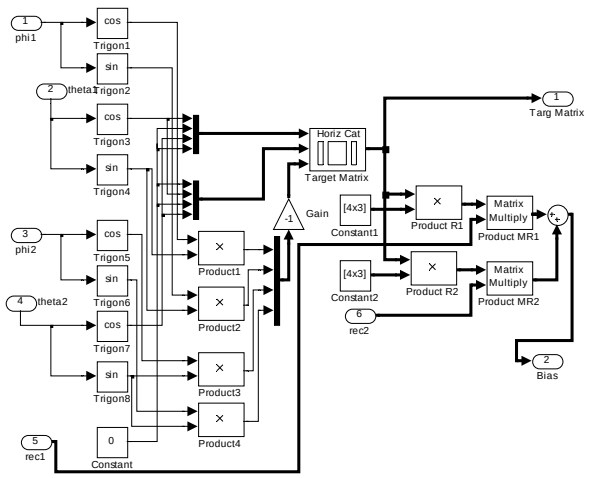

Fig. 3: A matrix generator

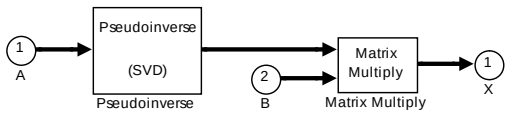

Fig. 4: SVD solver

Doppler frequency can be determined the same way replacing the sensors and the matrix generator with the appropriate ones. Scaled by the receivers' frequency according to

Test system was simulated consists of four receivers at:

$$\begin{bmatrix} x_1 \\ y_1 \\ z_1 \end{bmatrix} = \begin{bmatrix} 0 \\ 0 \\ 1.414 \end{bmatrix} Km; \begin{bmatrix} x_2 \\ y_2 \\ z_2 \end{bmatrix} = \begin{bmatrix} 20.544 \\ 0.743 \\ 0.525 \end{bmatrix} Km;$$
$$\begin{bmatrix} x_3 \\ y_3 \\ z_3 \end{bmatrix} = \begin{bmatrix} -6.614 \\ -17.218 \\ 0.545 \end{bmatrix} Km; \begin{bmatrix} x_4 \\ y_4 \\ z_4 \end{bmatrix} = \begin{bmatrix} -10.487 \\ 20.443 \\ 0.822 \end{bmatrix} Km \quad (27)$$

This set of receivers is placed on a rough land surface as receiver altitudes denote. Coordinate axes $x'x$ and $y'y$ denote position from West (negative) to East and from South to North respectively while axis $z'z$ denotes altitude (height) placement.

The target is a very fast (3.45 Mach – 1020 m/sec), very agile (20 g) aircraft traveling from East to West. It is maneuvering on a spiral orbit with a radius of 314.16 m (100 π) with angular velocity of π/4 rad/sec (45 degrees/sec). Position and Velocity vectors are extracted at 10000 samples/sec rates. (Only 100 samples/sec are shown in the diagrams for clarity reasons by simply downsampling the solution)

Both position and velocity tracking occur in the first repetition cycle (0.0075 simulated seconds). It has been observed that the tracking lines nearly match the real target and the real simulation time is less than the simulated time, making this model really practical (280~320 seconds measured for the 1000 sec simulation – 400 seconds for both Doppler and Location models running simultaneously).

For the Position vector very small errors have been indicated at the limits of computational error for both absolute and relative errors (shown in fig. 5 and 6)

For the Doppler velocity vector a similar method is followed. For evaluating the system a systematic error of 500 m/sec is inserted. It is observed that this error is corrected successfully (fig. 7, 8).

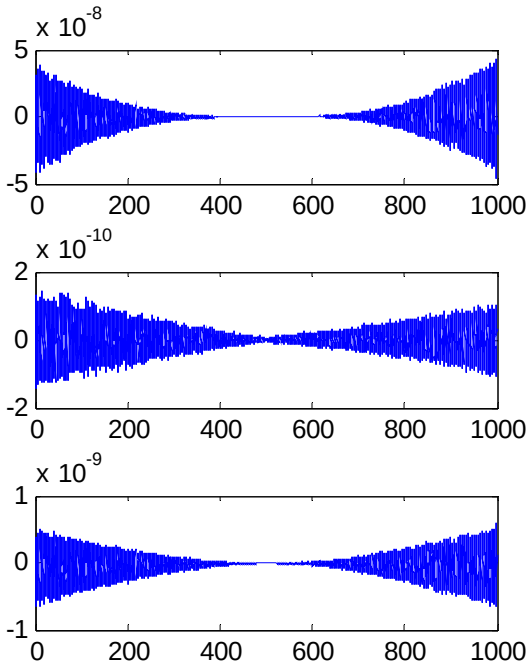

Fig. 5: Target Location errors (in meters) – Cartesian reference system

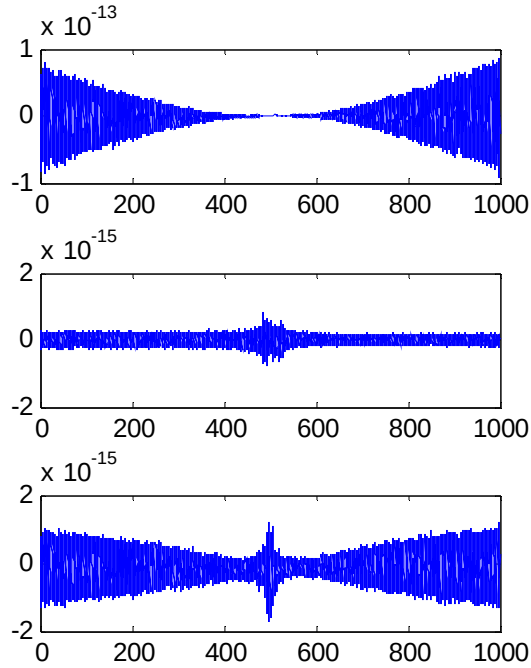

Fig. 6: Relative to range position errors.

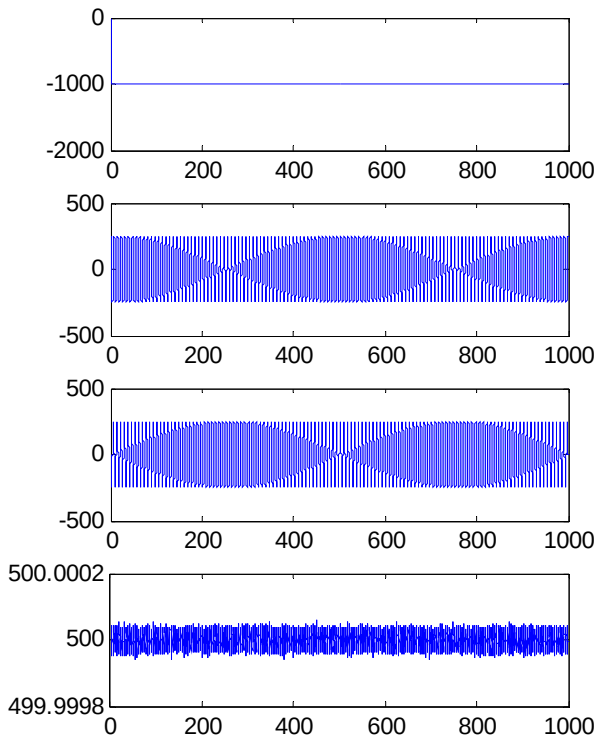

Fig. 7: Target velocity (m/sec) in Cartesian coordinates. 4th scope shows the systematic error

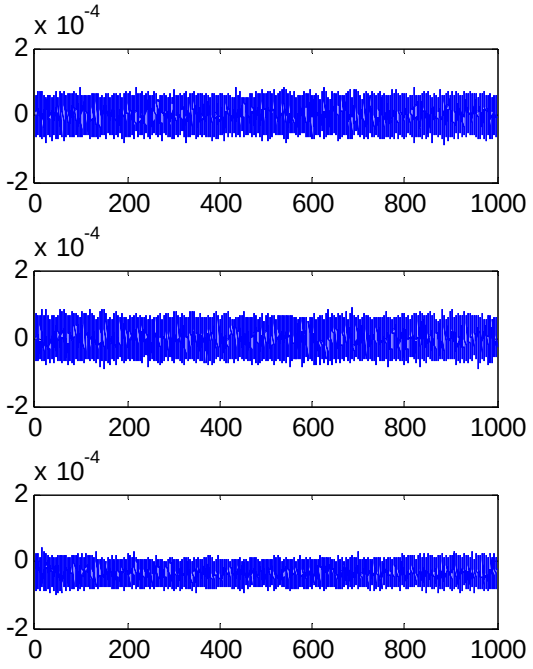

Fig. 8: Velocity errors in Cartesian coordinates.

5. Conclusions

It is shown that SVD method on a modern computer can solve the Angle of Arrival and Velocity Vector problems adequately. Small tolerable errors are apparent but not really compromising the method's accuracy.

It is also concluded that multistatic radars can take advantage of this method in order to track targets using economic commercial of the shelf (COTS) equipment and available programming solutions.

Especially for the Doppler phenomenon the statement in [1], [3] (that a systematic error in frequency translation does not affect Doppler measurement on a TIRN) is once again confirmed even with relatively large frequency errors, at the range of 50%. (Real world problems may not be that difficult) Thus this method is considered plausible for target tracking

References

[1]. Nikos J. Farsaris and Prof. Peter P. Stavroulakis: "Target Detection via Measurements Taken by a Transmitter Independent Receiver Network." AGARD CPP-582, April 1996.

[2]. Nikos J. Farsaris, Thomas D. Xenos, Peter P. Stavroulakis: "Time Difference of Arrival Method of Target Tracking using a Second Order Recurrent Artificial Neural Network for Passive Multistatic Radar Application." *WSEAS Transactions on Communications* ISSN 1109-2742 Issue 7 vol. 4. July 2005. pp 439-448.

[3]. Nikos J Farsaris, Thomas D Xenos, and Peter P Stavroulakis: "Tracking of maneuvering and ballistic targets via measurements taken by a transmitter – independent receiver network using first order recurrent neural networks." *WSEAS Transactions on Communications* Vol. 4, no. 8, pp. 548-555. Aug. 2005

[4]. Philip L. Bogler: *"Radar Principles with applications to tracking filters"* Chap.2 WILLEY-INTESCIENCE 1990. ISBN0-471-50192-1

[5]. Golub, Gene H. & Kahan, William (1965), "Calculating the singular values and pseudo-inverse of a matrix*", Journal of the Society for Industrial and Applied Mathematics: Series B, Numerical Analysis* ***2*** *(2): pp*205–224, 1965

[6]. E. ANDERSON, Z. BAI, C. BISCHOF, J. DEMMEL, J. DONGARRA, J. DU CROZ, A. GREENBAUM, S. HAMMARLING, A. MCKENNEY, AND D. SORENSEN, "*LAPACK: A portable linear algebra library for high-performance computers"*, Computer Science Dept. Technical Report CS-90-105, University of Tennessee, Knoxville, TN, May 1990.

[7]. Matlab Documentation team: *SVD Function, Matlab full product family help, Version. 7.1.0.256.* The Mathworks corp. Aug. 2005